**34 11 220** **Removing and installing/replacing both front brake discs**

**Special tools required:**

- 34 1 280

**Necessary preliminary tasks:**

- Remove wheels.
- Remove and clean brake pads.

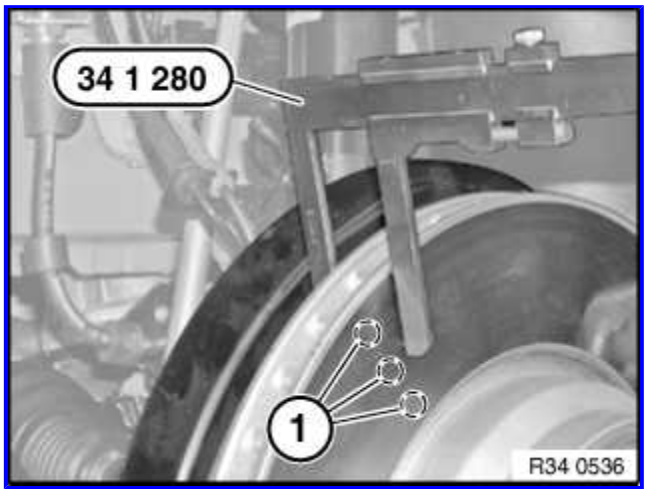


Check minimum brake disc thickness:

- Position special tool 34 1 280 at three measuring points in area (1) and measure.
- Compare measuring result and lowest value with setpoint value.

If the brake discs are replaced, you must also fit new brake pads.

Brake discs may only be replaced in pairs (on each axle).

**Important!**

New brake pads may only be fitted if the brake disc thickness is greater than the minimum brake disc thickness (MIN TH).

Release screws (1) and remove brake anchor plate (2) to the rear.

*Installation note:*
Tightening torque 34 11 2AZ.

cardiagn.com

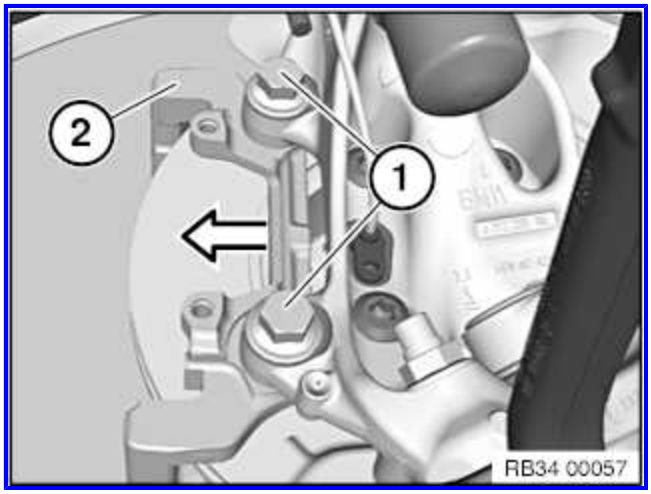


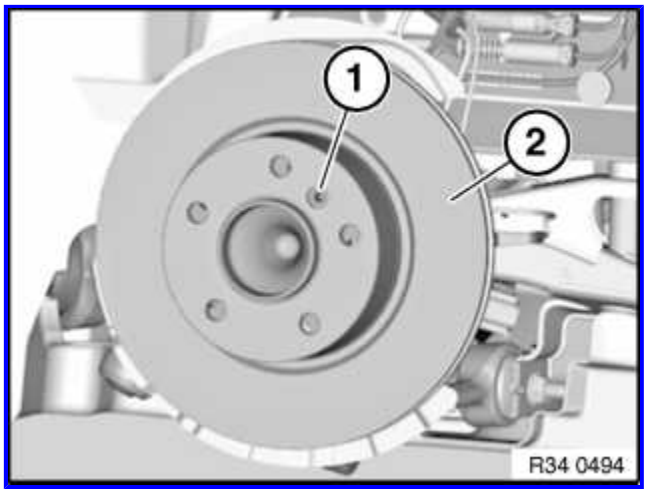


**Important!**

To release brake disc: Do not under any circumstances strike friction ring with a hammer or similar!

If necessary, carefully tap on base of brake disc chamber with a rubber mallet.

Clean contact surface of brake disc at wheel hub thoroughly and remove traces of corrosion.

Unevenness on contact surface may result in distortion of brake disc!

Release screw (1) and remove brake disc (2).

*Installation note:*
Replace screw.

Tightening torque 34 11 1AZ.

**After installation:**

- Read and comply with notes on braking in new brake discs / brake pads.

cardiagn.com